WD4503 Thermally Broken Aluminium Residential Window Brick Veneer with Reveal TESCON Back Seal 'L-Taping'

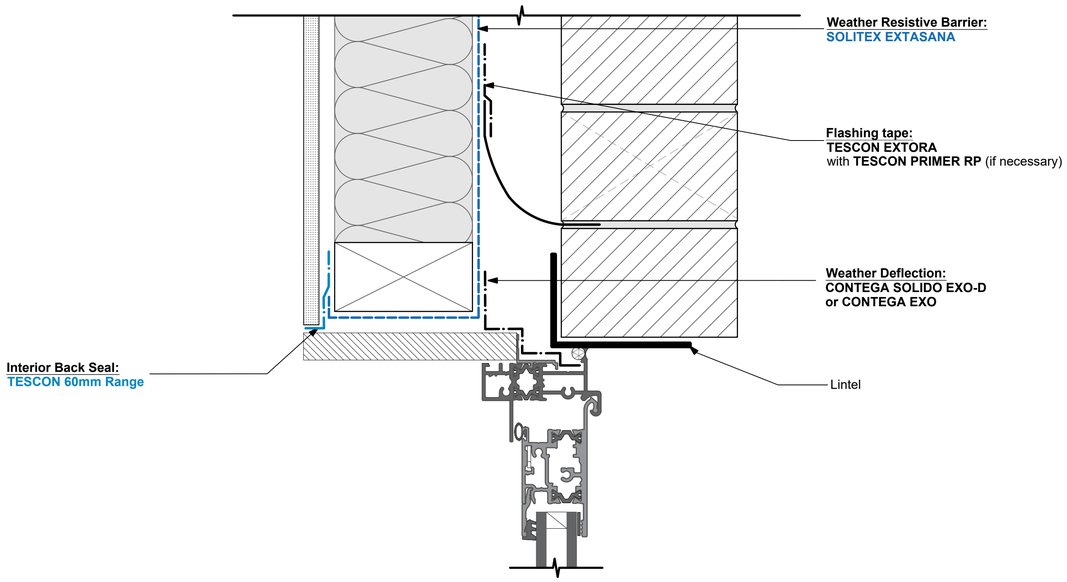

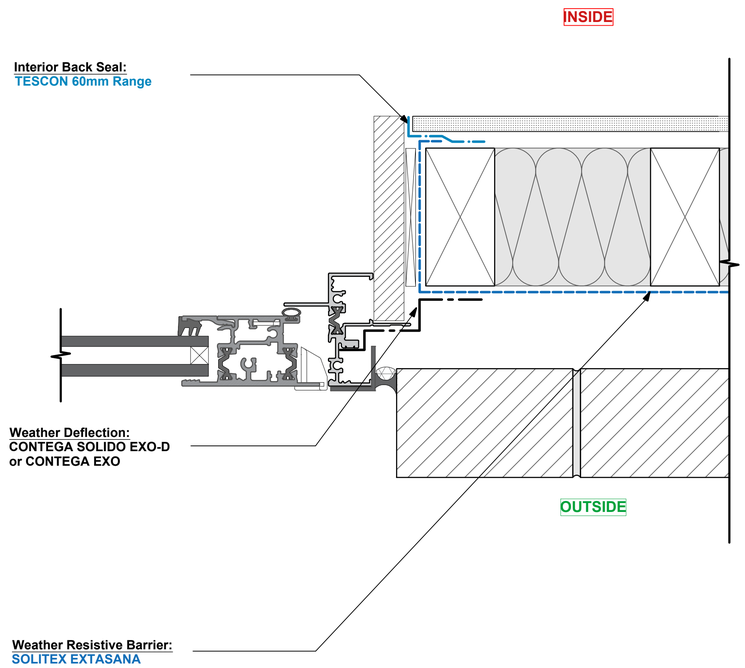

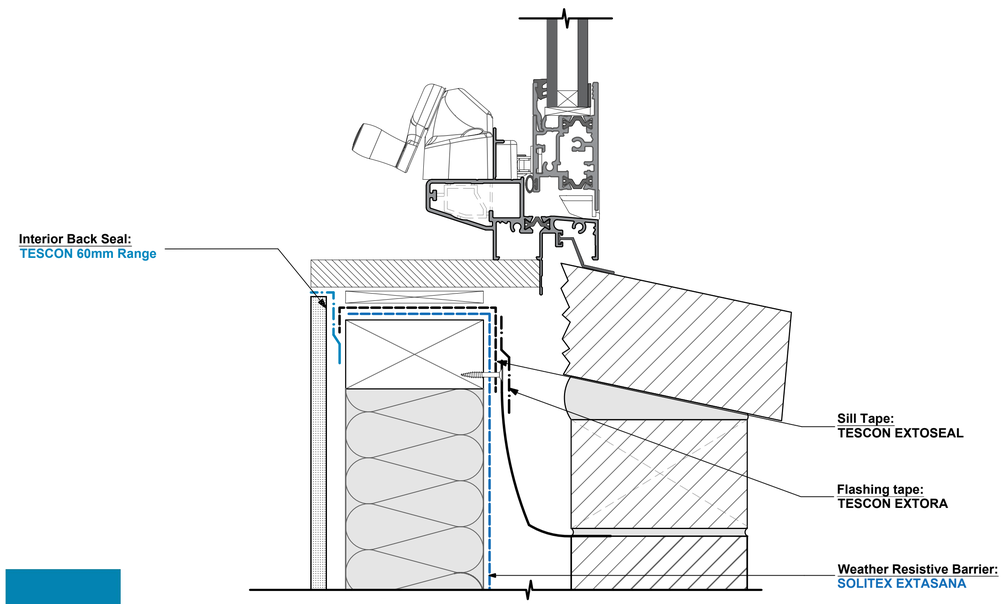

pro clima®
www.proclima.co.nz
www.proclima.com.au

Issued: 12/10/2026 **Revision: F** **Scale: 1:2 @ A1**

© This drawing is the property of Pro Clima NZ Ltd &/or Pro Clima Australia Pty Ltd and must not be copied without permission. This drawing is a guideline to provide typical Pro Clima system detailing for AS/NZS 4284 prototype testing only and subject to change without notice. For application to specific projects, thermal and hygrothermal performance should match specific design, materials and climate requirements. These can be confirmed by hygrothermal analysis using software e.g. WUFI®.
Structural, fire and acoustic engineering design and the incorporation of building services (plumbing and electrical) should be signed-off by a suitably qualified engineer to ensure compliance with all health and safety requirements.